LOAD RATINGS		
RATING	lbf	Newtons
RADIAL BASIC DYNAMIC	8,090	35,896
MAXIMUM STATIC CAPACITY	21,140	94,035

RECOMMENDED MOUNTING HOLE Ø		
Limit	Inch	mm
MIN	1.1250	28.5750
MAX	1.1255	28.5877

MAXIMUM CLAMPING TORQUE		
Thread Type	Inch Lbs	Nm
DRY	2,800	316
LUBRICATED	1,400	158

NOTES:
1. BEARING IS PACKED WITH NLGI GRADE 2, LITHIUM BASED GREASE (UNLESS OTHERWISE SPECIFIED)
2. ALL EXPOSED STEEL SURFACES HAVE BLACK OXIDE
3. LIMITING SPEED:
   A. GREASE = 1,400 RPM

MS NO.	NSN NO.	DRAWING NO. CCNBH-64-B

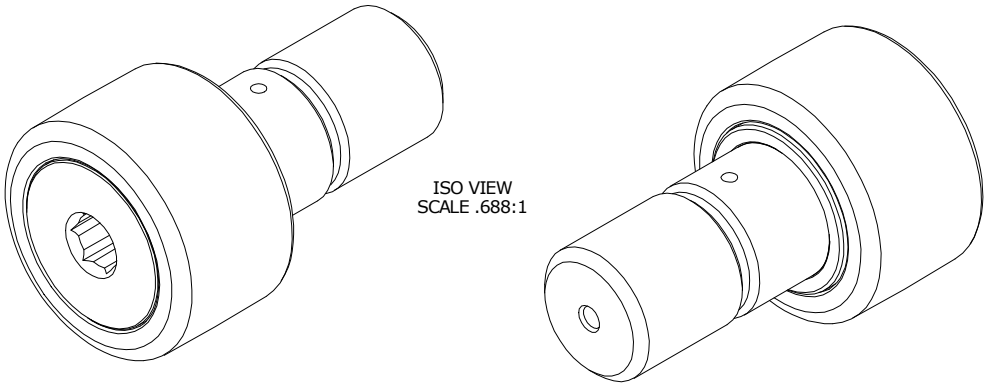

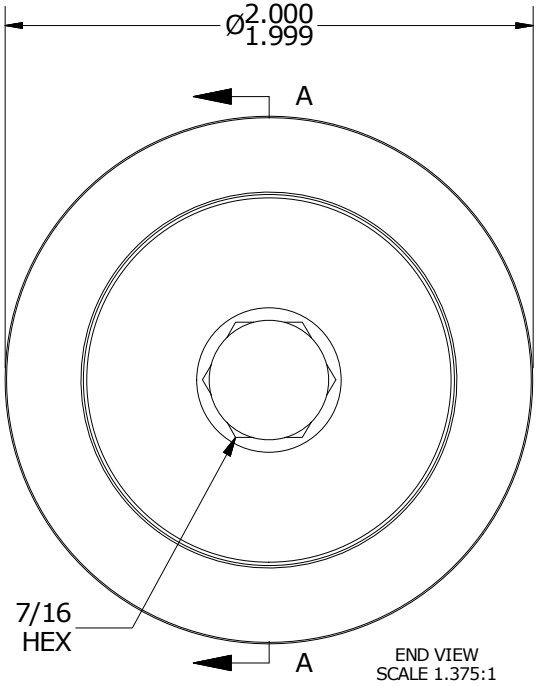

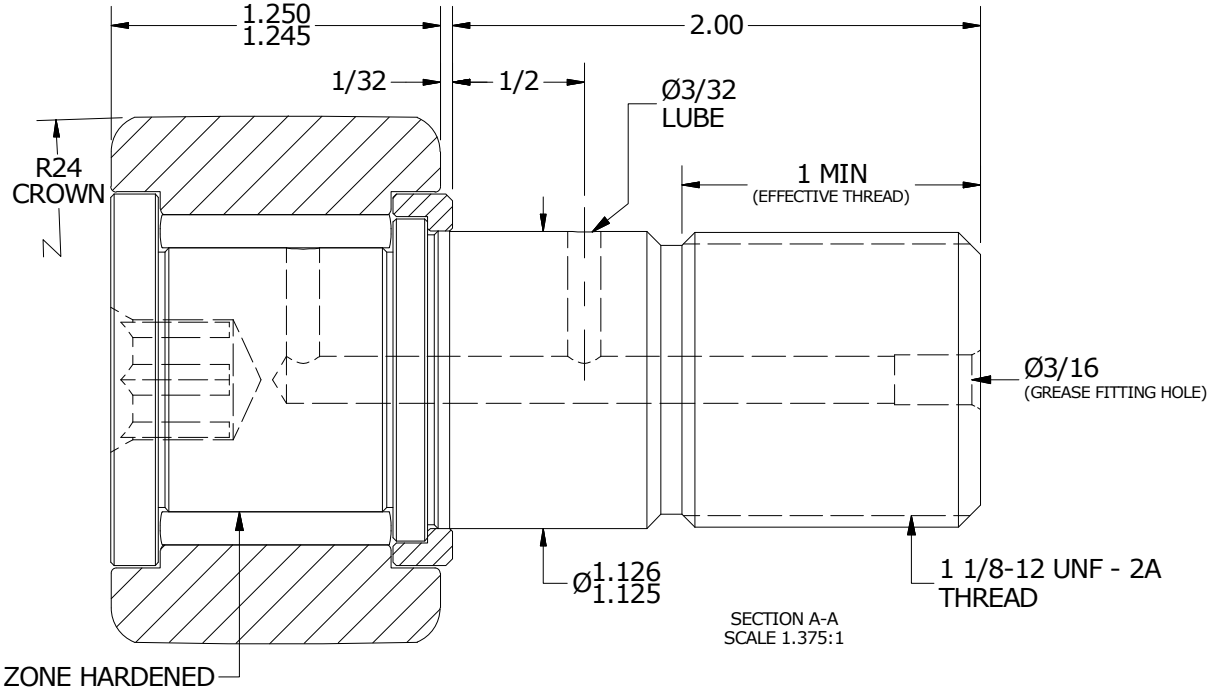

MATERIAL NOTES:

OUTER RING - BEARING STEEL, HEAT TREATED
STUD - BEARING STEEL, ZONE HARDENED
NEEDLE ROLLER(S) - BEARING STEEL, HEAT TREATED
WASHER - BEARING STEEL, HEAT TREATED

CUSTOMER PART#	XX = ± .01 XXX = ± .005 XXXX = ± .0005 ANGLES = ± 1° INCH [METRIC] FRACTION = ± 1/32	CARTER MANUFACTURING IS NOT RESPONSIBLE FOR TYPOGRAPHICAL ERRORS	**CARTER MANUFACTURING CO., INC.** GRAND HAVEN, MICHIGAN 49417			
		REVISION	PART NAME: ASSEMBLY		PRODUCT TYPE: CNB	
ENGINEERING CHANGE ORDER NOTE		B	AUTHOR BY HG	DRAWN BY EMD	CHK'D BY MD	SALES KR	MATERIAL NOTED
		REVISON BY JLB	DATE 8/1/2018	DATE 7/12/2006	DATE 8/1/2018	DATE 8/2/2018	SHEET 1 OF 2