LOAD RATINGS		
RATING	Lbf	Newton
RADIAL BASIC DYNAMIC	2,225	9,897
MAXIMUM STATIC CAPACITY	6,120	27,223

NOTES:
1. BEARING COMES PACKED WITH CARTER STANDARD FOOD GRADE H1, NLGI 2 GREASE

MS NO.	NSN NO.	DRAWING NO. XDY-32-S

ISO VIEW
SCALE 1.750 : 1

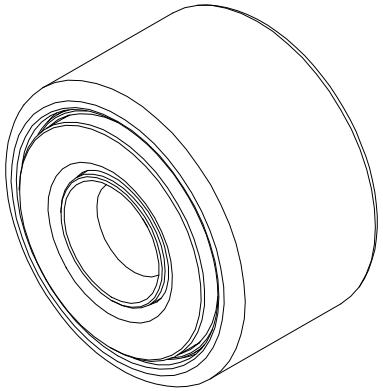

SIGNED DRAWING APPROVAL REQUIRED

PLEASE REVIEW AND VERIFY INFORMATION ON ALL SHEETS & RETURN COPY WITH SIGNED AND DATED APPROVAL, AND/OR REQUIRED CHANGES. CARTER WILL NOT PROCEED WITH ORDER UNTIL APPROVAL IS RECEIVED

SIGNED _____ DATE _____ APPROVED ☐ REJECTED ☐

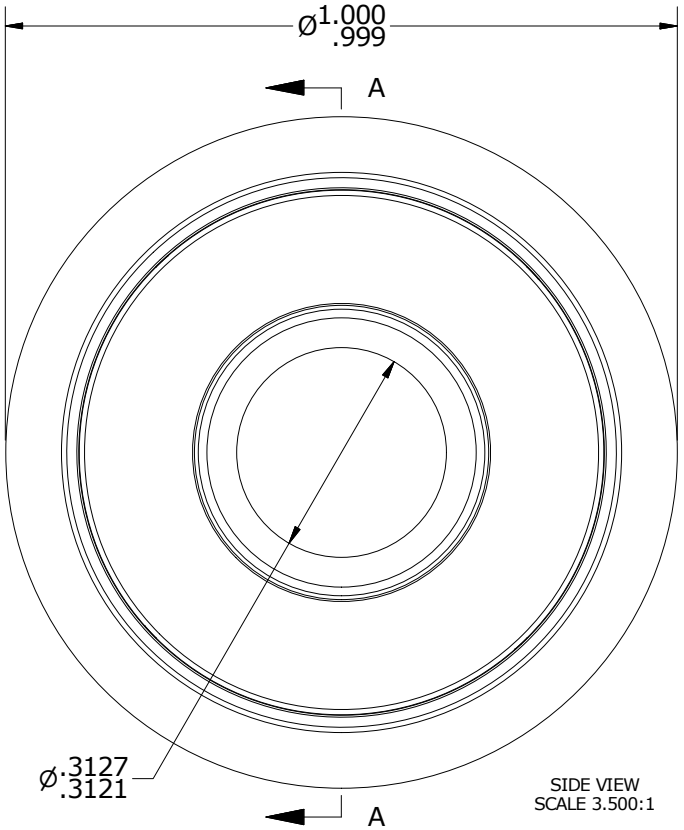

SIDE VIEW
SCALE 3.500:1

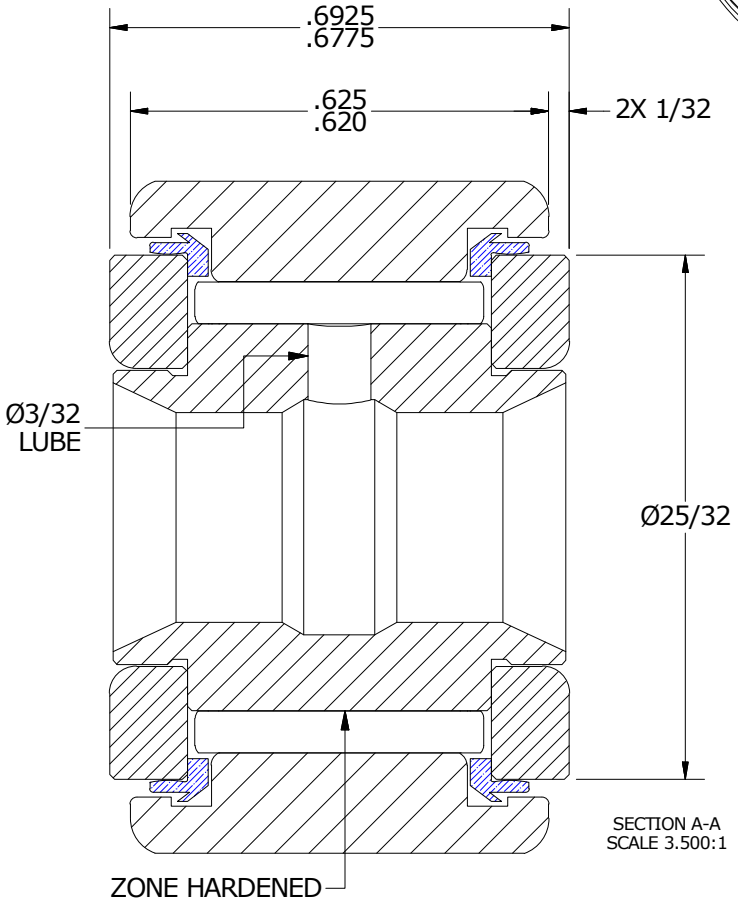

SECTION A-A
SCALE 3.500:1

MATERIAL NOTES:

OUTER RING - XD15NW STAINLESS STEEL, HEAT TREATED
INNER RING - XD15NW STAINLESS STEEL, ZONE HARDENED
NEEDLE ROLLER(S) - XD15NW STAINLESS STEEL, HEAT TREATED
WASHER(S) - XD15NW STAINLESS STEEL, HEAT TREATED
SEAL(S) - SYNTHETIC

CUSTOMER PART#

XX = ± .01
XXX = ± .005
XXXX = ± .0005
ANGLES = ± 1°
INCH [METRIC]
FRACTION = ± 1/32

ENGINEERING CHANGE ORDER NOTE

CARTER MANUFACTURING IS NOT RESPONSIBLE FOR TYPOGRAPHICAL ERRORS

CARTER MANUFACTURING CO., INC.
GRAND HAVEN, MICHIGAN 49417

PART NAME: ASSEMBLY | PRODUCT TYPE: XDY

REVISION	AUTHOR BY	DRAWN BY	CHK'D BY	SALES	MATERIAL
A	HG	SGW	MD	KR	NOTED
REVISON BY	DATE	DATE	DATE	DATE	SHEET
SGW	5/21/2018	4/6/2018	5/17/2018	5/17/2018	1 OF 2